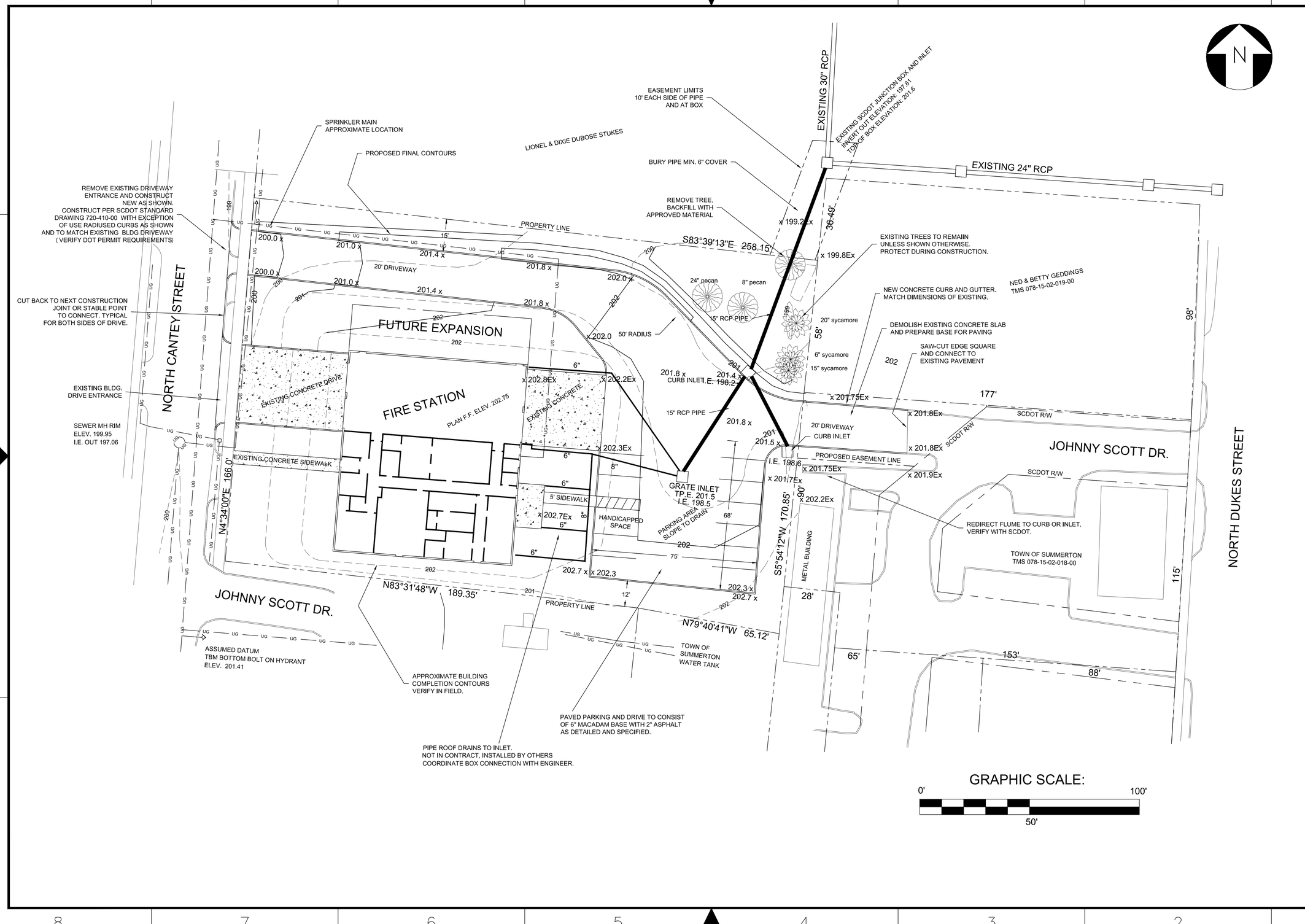

SUMMERTON STATION
SITE AND DRIVEWAY PLAN

DESIGN	WAT	APPROVED	
DRAWN		DWG. NO.	ENG337 - 01
DATE	FEB 4, 2015		
SCALE	AS SHOWN	SHEET	1 OF 3

REV/

REVISIONS

ZONE	REV	DESCRIPTION	DATE	APPROVED

Clarendon County Engineering
411 SUNSET DR. - MANNING, S.C. 29102
(803) 433-3256 FAX: (803) 435-2208

CLARENDON COUNTY FIRE DEPARTMENT

C:\Projects\2013\Eng337 Summerton Fire Station\Site Plan\2014-06-05 Summerton Fire Station Site Final R1.dwg, 4/15/2015 1:53:12 PM, DWG To PDF.pc3

SPECIFICATIONS - EARTHWORK AND PAVING

1. Scope. Earthwork shall consist of furnishing all labor, materials, equipment and service required to complete all clearing, grubbing, stripping, proofrolling, excavation, filling and grading, etc. as shown on the drawings and as specified herein. Refer to Geotechnical Investigation Report furnished with Request for Bids for information on existing soils and proposed methods of construction.

2. Disposal of Materials. Properly dispose of all materials to be disposed of as a result of clearing, grubbing and stripping as allowed by federal, state and local codes.

3. Excavation. The Contractor shall perform all excavation of every description of whatever substances encountered within the grading limits of the project. All excavations shall be to the lines and grade shown on the drawings. Should unsuitable materials be encountered, then the Contractor shall excavate below the grade shown and shall replace it with suitable materials.

4. Protection of Existing Utilities. The Contractor shall be responsible for and shall take all necessary precautions to protect and preserve any and all existing culverts, cables, pipelines, conduits, subdrains, etc. or parts thereof which may be affected by his operations on the Contract (whether shown or not shown on the drawings) .

5. Preparation of Ground Surface for Fill. All clearing and grubbing shall have been completed and stump holes and depressions filed and compacted before proceeding with the embankment construction. Before the embankment is placed on hillsides and slopes, the existing ground surface shall be plowed or deeply scarified or, if the nature of the ground indicates, greater precautions should be taken for binding the fill to the original ground.

6. Embankment. Embankments shall be formed by placing and spreading the material in successive, uniform, horizontal layers of not more than 8 inches in depth, loose measurement, for the full width of the cross section. Each layer of the embankment material shall be kept uniform and shaped to drain for the full width of the cross section by the use of blade graders, bulldozers, or other suitable equipment. Fills and embankments shall be contructed at the locations and alignment and grades as shown on the plans. Fill material shall be satisfactory material free from root, organic material and trash, and from stones having a maximum dimension greater than 8 inches.

7. Embankment Compaction. Each layer of embankment shall be compacted to not less than 95% of maximum Modified Proctor density before successive layers are applied. The compaction shall be accomplished by using suitable construction procedures and while the material is at a suitable moisture content.

8. Preparation of Subgrade. All unstable material which is unsuitable for compaction shall be removed and replaced with materials that are satisfactory. Any boulders shall either be removed or cut off 8 inches below subgrade. All stumps and large roots shall also be removed. Any depressions that exist or develop shall be replaced with approved materials and compacted.

9. Finished Excavation, Fills and Embankments. All areas covered by the project, including excavated and filled sections and adjacent transition areas, shall be uniformly smooth graded. The finished surface shall be reasonably smooth, compacted, and free from irregular surface changes. The degree of finish shall be that ordinarily obtainable from either bladegrader or scraper operations, supplemented with hand raking and finishing. The finished surface shall not be more than 0.10 foot above or below the established grade or approved cross section.

10. Placement of Topsoil Blanket. The ground surface shall be cleared of all stones larger than 2" in diameter, roots, cable, wire, grade stakes, and any other material or debris which might hinder proper grading, tillage or other required operations. The topsoil shall be uniformly distributed, evenly spread and rolled with a roller of one hundred pounds weight for each foot of width. The completed surface shall match finished grades as shown on the drawings. Any irregularities in the surface shall be corrected and , if necessary, additional topsoil shall be added. Topsoil shall not be placed when the topsoil or the subgrade is in a frozen or muddy condition or in a condition otherwise detrimental to subsequent operations.

11. Paved Areas. Where indicated on the plans contractor is to provide asphalt paving of the drives, parking areas, paths. Requirements are as follows:

A. Paved areas shall be graded to the typical section and in accordance with the approved plan, and shall be free of roots, trash and other objectionable materials. Streets shall be fine graded to grade stakes set on centerline at intervals of not more than 100' on straight grades and not more than 50' on curves.

B. A suitable soil for a minimum depth of eighteen (18) inches immediately below subgrade is required, so as to provide a surface which will serve the traffic needs in extremely dry weather, normal weather and wet weather. Where necessary, a stabilizing type soil shall be added and properly mixed with the soil in place for a depth of not less than six (6) inches.

C. When unsuitable material is encountered and it is necessary to perform mucking out work, the roadway shall be mucked out for its entire width, shall be backfilled with a suitable, stable type soil and shall be properly compacted.

D. The subgrade shall be thoroughly wetted and compacted for a width extending two (2) feet outside the edges of the proposed pavement before the base course is placed.

E. Grading work, paving materials, methods and equipment, unless specifically stated otherwise herein shall be in accordance with the Geotechnical Investigation Report and requirements of the S.C. State Department of Transportation Standard Specifications for Highway Construction (Sections 306, 401 through 405) .

F. Subgrade and base compaction shall be tested for quality control. Minimum testing will include proofroll of the subgrade and base after compaction and just prior to placement of next course of work. Contractor shall provide a fully loaded dump truck and personnel for proofroll test. Any deficiencies discovered shall be repaired at no additional cost to the Owner. Provide 1 year warranty on work.

12. Protection. Protect newly graded areas from traffic and erosion and keep free of trash and debris. Re-establish grades in settled, eroded and rutted areas.

13. Erosion Control. Unless exposed earth areas are properly cared for during construction, they may result in substantial sedimentation damage downstream from the construction area. The Contractor shall be responsible for conducting his site grading and drainage operations as directed and in such manner as to prevent excessive soil erosion of the construction site work areas and so as to conform fully with the requirements of the Erosion Control Plan and all applicable regulations. Should clogging of structures occur as the result of erosion at the site of this construction, immediately remove the clogging soil and/or debris and restore the proper functioning of these structures.

14. Temporary and Permanent Vegetation. Establish temporary and/or permanent vegetation in all disturbed areas as soon as it is practical following grading or any other construction operations. See Landscaping and Erosion Control Plans for details.

END OF SECTION

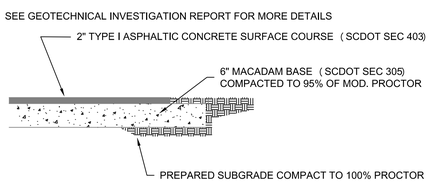

PAVEMENT SECTION
N.T.S.

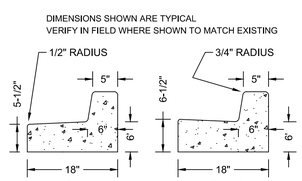

SECTION
CURB & GUTTER
N.T.S.

SPECIFICATIONS - CAST-IN-PLACE CONCRETE

PART 1 - GENERAL

1.1 DESCRIPTION
A. Work included: Provide cast-in-place concrete, including formwork and reinforcement, where shown on the Drawings, as specified herein, and as needed for a complete and proper installation.

1.2 QUALITY ASSURANCE
A. Comply with "Specifications for Structural Concrete for Buildings", ACI 301, except as may be modified herein.

PART 2 - PRODUCTS

2.1 FORMS
A. General
1. Construct forms in conformance with ACI 347.
2. Side forms for footing may be omitted, and concrete may be placed directly against excavation.

2.2 REINFORCEMENT
A. Comply with the following as minimums:
1. Bars: ASTM A615, Grade 60, unless otherwise shown on the Drawings, using deformed bars for Number 3 and larger;
2. Welded wire fabric: ASTM A185;
3. Bending: ACI 318.
B. Fabricate reinforcement to the required shapes and dimensions, within fabrication tolerances stated in the CRSI "Manual of Standard Practices".

2.3 CONCRETE
A. Comply with the following as minimums:
1. Portland cement: ASTM C150, Type I or II, low alkali,
2. Aggregate, ASTM C30, uniformly graded and clean.
3. Aggregate, course: Crushed rock or washed gravel with minimum size between 3/4" and 1-1/2", with a maximum size number 4.
4. Aggregate, fine: Natural washed sand of hard and durable particles varying from fine to particles passing a 3/8" screen, of which at least 12% shall pass a 50-mesh screen.
5. Water: Clean and potable.
B. Provide concrete with the 28 day compressive strengths following as minimum:
1. All structural concrete except as indicated in 2 below: 4000 psi
2. All sidewalks, curbs and gutters, and unreinforceed foundations: 3000 psi

PART 3 - EXECUTION

3.1 SURFACE CONDITIONS
A. Examine the areas and conditions under which work of this Section will be performed. Correct conditions detrimental to timely and proper completion of the Work. Do not proceed until unsatisfactory conditions are corrected.
B. Water, mud, organic and other detrimental material shall be removed from excavations before concrete is deposited.

3.2 REINFORCING
A. Comply with the following, as well as the specified standards, for details and methods of reinforcing placement and supports.
1. Clean reinforcement and remove loose dust and mill scale, earth, and other materials which reduce or destroy bond with concrete.
2. Position, support, and secure reinforcement against displacement by forms, construction, and the concrete placement operations.
3. Place reinforcement to obtain the required coverages for concrete protection.
4. Install welded wire fabric in as long lengths as practicable, lapping adjoining pieces one full mesh minimum.
5. Splices in reinforcement steel shall be in accordance with the latest revision of the American Concrete Institute "Building Code Requirements for Reinforced Concrete" (ACI 318).

3.3 PLACING CONCRETE
A. Mixing:
1. Transit mix the concrete in accordance with provisions of ASTM C94.
2. Do not use concrete that is not placed within 1-1/2 hours after water is first introduced into the mix.
B. Preparation:
1. Set forms for slope as indicated. Slope sidewalks adjacent building away from buildings to prevent water from entering the building. Remove foreign matter accumulated in the forms.
2. Locate and construct control and contraction joints in accordance with the Drawings. Provide 1/2" expansion material at all contact points with structure or existing sidewalk. Provide maximum contraction joints spacing of 6' in sidewalk.
C. Placing concrete slabs:
1. Deposit and consolidate concrete slabs in a continuous operation, within limits of construction joints, until the placing of a panel or section is completed.
2. Bring slab surfaces to the correct level with a straight edge, and then strike off.
3. Use bullfloats or darbies to smooth the surface, leaving the surface free from bumps and hollows.
4. Do not sprinkle water on the plastic surface. Do not disturb the slab surface prior to start of finishing operations.

D. Provide finish for slabs as shown on drawings or as directed by Owner. Sidewalks and curbs to have light broom finish and tooled edges.

3.4 REMOVAL OF FORMS
A. Do not disturb or remove forms until the concrete has hardened sufficiently to permit form removal with complete safety and no damage to structure. Do not remove shoring until the member has acquired sufficient strength to support its own weight, the load upon it, and the added load of construction.
B. Exercise care in removing forms from finished concrete surfaces so that surfaces are not marred or gouged, and that corners are true, sharp, and unbroken.
C. Repair any damaged areas as approved by Engineer.

END OF SECTION

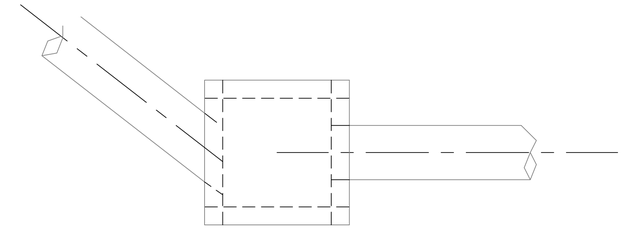

PLAN

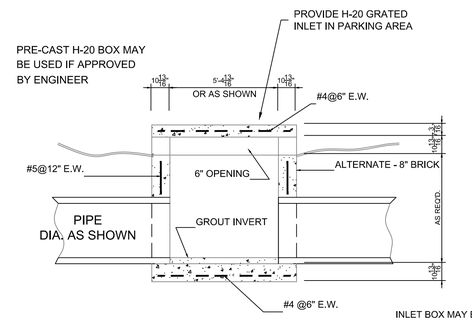

INLET BOX MAY BE:
TINDALL GRATE INLET BOX
36" X 36" OR APPROVED EQUAL
PRECAST CONCRETE
OR AS REQUIRED FOR PIPE SIZES SHOWN.

SECTION
SIDE DROP INLET
N.T.S.

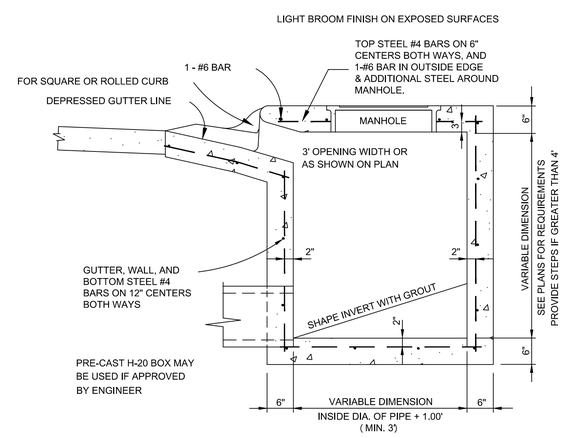

SECTION
CURB INLET
N.T.S.

SUMMERTON STATION DETAILS AND SPECS

DESIGN	WAT	APPROVED	
DRAWN		DWG. NO.	ENG337 - 01
DATE	FEB. 4, 2015	SHEET	2 OF 3
SCALE	AS SHOWN		

REVISIONS

ZONE	REV	DESCRIPTION	DATE	APPROVED

Clarendon County Engineering
411 SUNSET DR. - MANNING, S.C. 29102
(803) 433-3256 FAX: (803) 435-2208

CLARENDON COUNTY FIRE DEPARTMENT

C:\Projects\2013\Eng337 Summerton Fire Station\Site Plan\2014-06-05 Summerton Fire Station Site Final R1.dwg, 4/15/2015 1:53:21 PM, DWG To PDF.pc3

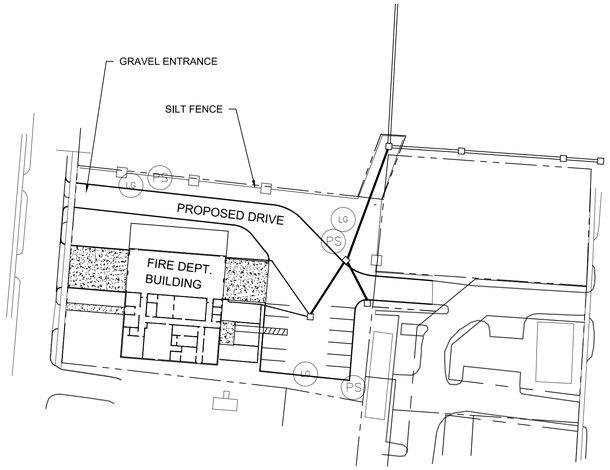

EROSION CONTROL PLAN

GRAPHIC SCALE:
60'

CONSTRUCTION SEQUENCE

1. Verify Easement and Encroachment Permit Requirements.
2. Only clear and grub for silt fence initially.
3. Place silt fence and other controls as shown or specified.
4. Finish clearing and grubbing and grading.
5. Provide temporary grassing if required as specified.
6. Provide permanent stabilization as shown and specified.
7. Remove temporary sediment and control measures only after entire area draining to the structures is stabilized and approved by Engineer.
8. Maintain all sediment and erosion control structures for the extent of the project.

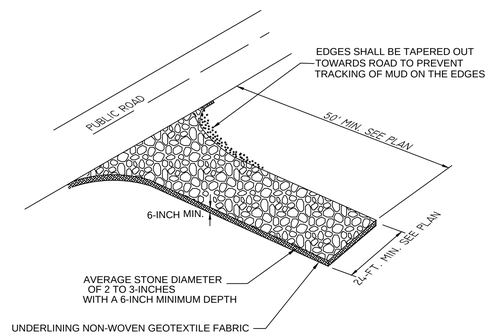

GRAVEL ENTRANCE

STABILIZED CONSTRUCTION ENTRANCE

Inspection and Maintenance

Inspect construction entrances every seven (7) calendar days . Check for mud and sediment buildup and pad integrity. Maintenance is required more frequently in wet weather conditions. Reshape the stone pad as needed for drainage and runoff control.

Wash or replace stones as needed and as directed by the inspector. The stone in the entrance should be washed or replaced whenever the entrance fails to reduce mud being carried off-site by vehicles. Frequent washing will extend the useful life of stone.

Immediately remove mud and sediment tracked or washed onto public roads by brushing or sweeping. Flushing should only be used when the water can be discharged to a sediment trap or basin.

Repair any broken pavement immediately.

EROSION CONTROL SYMBOL LEGEND

DESCRIPTION EROSION PREVENTION AND SEDIMENT CONTROL	SYMBOL
LAND GRADING:	LG OR
TOPSOILING:	
TEMPORARY SEEDING:	TS
MULCHING:	M
ECB OR TRM	
PERMANENT SEEDING:	PS
SILT FENCE:	
STONE CHECK DAM	

SEEDING NOTES

TEMPORARY SEEDING NOTES:

1. FOR AUGUST 15 TO APRIL 15 APPLY MINIMUM 1.5 LB OF RYE (GRAIN) PER 1,000 SQ. FT. FOR APRIL 15 TO AUGUST 15 APPLY MINIMUM OF 1.2 LB OF GERMAN MILLET PER 1,000 SQ. FT. APPROVED ALTERNATE OR MIXES MAY BE USED.

2. FOLLOW RECOMMENDATIONS OF SOIL TEST OR APPLY 70 LBS OF AGRICULTURAL LIMESTONE AND 25 LBS OF 10-10-10 FERTILIZER PER 1,000 SQ.FT.

3. PREPARE SEEDBED, PLANT AND MULCH AS DIRECTED BELOW.

4. IF NECESSARY TO EXTEND TEMPORARY COVER BEYOND JUNE 15, OVERSEED WITH 1 LB PER 1,000 SQ.FT. ANNUAL LESPEDEZA IN LATE FEBRUARY OR EARLY MARCH.

5. REPAIR AND REFERTILIZE DAMAGED AREAS IMMEDIATELY.

6. VERIFY ALL PLANTING / SEEDING DETAILS WITH FIRE DEPT..

PERMANENT SEEDING NOTES:

1. ALL UNPAVED (NO STONE SURFACE) DISTURBED AREAS (AND LAWN TO BE REESTABLISHED) OUTSIDE PLANTING BED IS TO BE SEEDED WITH 0.3 LB/1,000 SQ.FT. OF BERMUDAGRASS MARCH 15 - JUNE 30 OR 1.5 LB /1,000 SQ.FT. OF TALL FESCUE AUG 15 - NOV 30. APPROVED ALTERNATES OR MIXES MAY BE USED.

2. FOLLOW RECOMMENDATIONS OF SOIL TEST OR APPLY 70 LBS OF AGRICULTURAL LIMESTONE AND 25 LBS OF 10-10-10 FERTILIZER PER 1,000 SQ.FT.

3. PREPARE SEEDBED, PLANT AND MULCH AS DIRECTED BELOW.

4. REPAIR AND REFERTILIZE DAMAGED AREAS IMMEDIATELY.

5. VERIFY ALL PLANTING / SEEDING DETAILS WITH FIRE DEPT.

SEEDBED PREPARATION NOTES:

1. REMOVE ANY UNDESIRABLE GROUNDCOVER INCLUDING ANY TEMPORARY SEEDING FOR PERMANENT SEEDING INSTALLATION.

2. RIP THE AREA TO A MINIMUM DEPTH OF 4". ADD TOPSOIL IF REQUIRED FOR POOR SOIL AREAS.

3. REMOVE ALL LOOSE ROCKS, ROOTS, ETC. LEAVING SURFACE SMOOTH AND UNIFORM CONFORMING TO GRADES SHOWN ON GRADING PLAN.

4. APPLY SEED, LIME, FERTILIZER AND MIX WITH THE SOIL AS RECOMMENDED BY NURSERY OR SUPPLIER.

5. MULCH IMMEDIATELY AFTER SEEDING WITH 100 LBS PER 1,000 SQ.FT. OF STRAW OR APPROVED EQUAL. ANCHOR STRAW BY TACKING WITH ASPHALT, NETTING OR BY USE OF A MULCH ANCHORING TOOL.

EROSION CONTROL NOTES:

1. Implement erosion control features shown prior to construction work on site. If necessary, slopes, which exceed eight (8) vertical feet should be stabilized with synthetic or vegetative mats, in addition to hydroseeding. It may be necessary to install temporary slope drains during construction. Temporary berms may be needed until the slope is brought to grade.

2. Stabilization measures shall be initiated as soon as practicable in portions of the site where construction activities have temporarily or permanently ceased, but in no case more than fourteen (14) days after work has ceased, except as stated below.
a. Where stabilization by the 14th day is precluded by snow cover or frozen ground conditions stabilization measures must be initiated as soon as practicable.
b. Where construction activity on a portion of the Site is temporarily ceased, and earth–disturbing activities will be resumed within 14 days, temporary stabilization measures do not have to be initiated on that portion of the Site.

3. All sediment and erosion control devices shall be inspected once every calendar week. If periodic inspection or other information indicates that a BMP has been inappropriately or incorrectly installed, the Permittee must address the necessary replacement or modification required to correc the BMP within 48 hours of identification.

4. Provide silt fence and/or other control devices, as may be required, to control soil erosion during utility construction. All disturbed areas shall be cleaned, graded, and stabilized with grassing immediately after the utility installation. Fill, cover, and temporary seeding at the end of each day are recommended. If water is encountered while trenching, the water should be filtered to remove any sediments before being pumped back into any waters of the State.

5. All erosion control devices shall be properly maintained during all phases of construction until the completion of all construction activities and all disturbed areas have been stabilized. Additional control devices may be required during construction in order to control erosion and/or offsite sedimentation. All temporary control devices shall be removed once construction is complete and the site is stabilized.

6. The contractor must take necessary action to minimize the tracking of mud onto paved roadway(s) from construction areas and the generation of dust. The contractor shall daily remove mud/soil from pavement, as required.

7. Note on subdivisions not included.

8. Temporary diversion berms and ditches will be provided as needed during construction to protect work areas from upslope runoff and/or to divert sediment–laden water to appropriate traps or stable outlets.

9. All waters of the State (WoS), including wetlands, are to be flagged or otherwise clearly marked in the field. A double row of silt fence is to be installed in all areas where a 50–foot buffer can't be maintained between the disturbed area and all WoS. A 10–foot buffer should be maintained between the last row of silt fence and all WoS. (NO WOS ON SITE)

10. Litter, construction debris, oils, fuels, and building products with significant potential for impact (such as stockpiles of freshly treated lumber) and construction chemicals that could be exposed to storm water must be prevented from becoming a pollutant source in storm water discharges.

11. NOT INCLUDED.

12. Initiate stabilization measures on any exposed steep slope (3H:1V or greater) where land–disturbing activities have permanently or temprarily ceased, and will not resume for a period of 7 calendar days.

13. Minimize soil compaction and unless infeasible, preserve topsoil.

14. Minimize the discharge of pollutants from equipment and vehicle washing, wheel wash water, and other wash waters. Wash waters must be treated in a sediment basin or alternative control that provides equivalent or better treatment prior to discharge.

15. Minimize the dischage of pollutants from dewatering of trenches and excavated areas. These discharges are to be routed through appropriate BMP's (sediment basin, filter bag, etc.).

16. The following discharges from sites are prohibited: (1) Wastewater from washout of concrete, unless managed by an appropriate control: (2) Wastewater from washout and cleanout of stucco, paint, form release oils, curing compounds and other construction materials; (3) Fuels, oils or other pollutants used in vehicle and equipment operation and maintenance; and (4) Soaps or solvents unsed in vehicle and equipment washing.

17. After construction activities begin, inspections must be conducted at a minimum of at least once every calendar week and must be conducted until final stabilization is reached on all areas of the construction site.

18. If existing BMP's need to be modified or if additional BMP's are necessary to comply with the requirements of this permit and/or SC's Water Quality Standards, implementation must be completed before the next storm event whenever practicable. alternative BMP's must be implemented as soon as reasonably possible.

19. NOT INCLUDED

20. Provide sanitary facilities for workers on the site.

21. Redistribute sediment collected on site prior to grassing or dispose of in other approved method only.

SILT FENCE DETAIL

Installation

Excavate a trench approximately 6-inches wide and 6-inches deep when placing fabric by hand. Place 12-inches of geotextile fabric into the 6-inch deep trench, extending the remaining 6-inches towards the upslope side of the trench. Backfill the trench with soil or gravel and compact.Bury 12-inches of fabric into the ground when pneumatically installing silt fence with a slicing method. Purchase fabric in continuous rolls and cut to the length of the barrier to avoid joints. When joints are necessary, wrapped the fabric together at a support post with both ends fastened to the post, with a 6-inch minimum overlap. Install posts to a minimum depth of 24-inches. Install posts a minimum of 1- to 2- inches above the fabric, with no more than 3-feet of the post above the ground. Space posts to maximum 6-feet centers. Attach fabric to wood posts using staples made of heavy-duty wire at least 1½-inch long, spaced a maximum of 6-inches apart. Staple a 2-inch wide lathe over the filter fabric to securely fasten it to the upslope side of wooden posts. Attach fabric to the steel posts using heavy-duty plastic ties that are evenly spaced and placed in a manner to prevent sagging or tearing of the fabric. In call cases, ties should be affixed in no less than 4 places. Install the fabric a minimum of 24-inches above the ground. When necessary, the height of the fence above ground may be greater than 24-inches. In tidal areas, extra silt fence height may be required. The post height will be twice the exposed post height. Post spacing willremain the same and extra height fabric will be 4-, 5-, or 6-feet tall. Locate silt fence checks every 100 feet maximum and at low points. Install the fence perpendicular to the direction of flow and place the fence the proper distance from the toe of steep slopes to provide sediment storage and access for maintenance and cleanout.

Inspection and Maintenance

Inspect every seven calendar days . Check for sediment buildup
and fence integrity. Check where runoff has eroded a channel beneath the fence, or where the fence has sagged or collapsed by fence overtopping.
If the fence fabric tears, begins to decompose, or in any way becomes ineffective, replace the section of fence immediately.
Remove sediment accumulated along the fence when it reaches 1/3 the height of the fence, especially if heavy rains are expected.
Remove trapped sediment from the site or stabilize it on site.
Remove silt fence within 30 days after final stabilization is achieved or after temporary best management practices (BMPs) are no longer needed.
Permanently stabilize disturbed areas resulting from fence removal

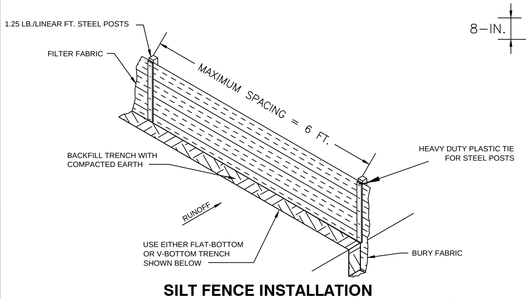

SILT FENCE INSTALLATION

SILT FENCE

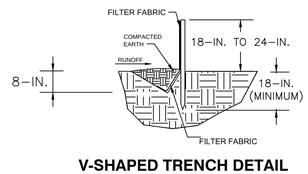

V-SHAPED TRENCH DETAIL

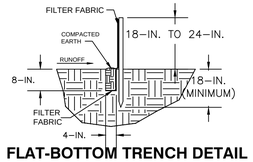

FLAT-BOTTOM TRENCH DETAIL

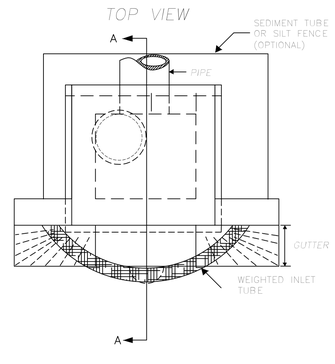

INLET TUBES
NOT TO SCALE

SUMMERTON STATION EROSION CONTROL PLAN

DESIGN	WAT	APPROVED	
DRAWN		DWG NO.	ENG337 - 01
DATE	FEB. 4, 2015		
SCALE	AS SHOWN	SHEET	2 OF 3

REVISIONS: ZONE | REV | DESCRIPTION | DATE | APPROVED

Clarendon County Engineering
411 SUNSET DR. - MANNING, S.C. 29102
(803) 433-3256 FAX: (803) 435-2208

CLARENDON COUNTY FIRE DEPARTMENT

C:\Projects\2013\Eng337 Summerton Fire Station\Site Plan\2014-06-05 Summerton Fire Station Site Final R1.dwg, 4/15/2015 1:53:30 PM, DWG To PDF.pc3